Authorised Value Provider

INFINITE ENGINEERING

one stop safety solutions

CATALOG

ABB micro drives

ACS150, 0.37 to 4 kW

Get the best out of your basic applications. ACS150 drives.

Table of contents

004	ABB micro drives, ACS150
005	Easily integrated drives for a wide range of applications
006	Ratings, types and dimensions
008	Technical data
009	Control connections and interfaces
010	Cooling and fuses
011	Options
014	A lifetime of peak performance

ABB micro drives, ACS150

Get the best out of your basic applications

Even your smallest motors can enjoy the daily dependability, reliability and performance of our drive technology. The ABB micro drives can be conveniently tuned to your business needs with precise speed control and simple integration. Add compact efficiency, convenient global service and expertise, and you have everything you need to add big benefits to your small motors.

Take smooth performance to the next level with the wide power range and functionality of ACS150. Available in both single and three phase supplies. The drives are easy to select and provide a range of built-in features as standard including PID control, brake chopper, fixed keypad and speed control potentiometer. An optional FlashDrop drive configuration tool makes configuring unpowered drives quick and easy.

The ABB micro drives meet the requirements of OEMs, machinery builders and panel builders. These drives are widely available through the ABB distribution network.

Highlights

- Power range 0.37 to 4 kW/0.5 to 5 Hp
- IP20 enclosure
- Scalar control
- Integrated user interface and potentiometer
- Built-in brake chopper
- Built-in EMC filter for 2nd environment

Feature	Advantage	Benefit
Worldwide availability and service	Drives are available worldwide and permanently stocked in four regions. Dedicated global service and support network that is one of the widest in the industry.	Fast and reliable delivery with dedicated support to any country in the world.
User-friendly LCD control panel and integrated potentiometer	Clear alphanumeric display. Easy setup and use.	Time savings due to quick setup and simple configuration.
Flexible mounting alternatives	Screw or DIN rail mounting, sideways or side-by-side.	One drive type can be used in various designs, saving installation costs and time.
Integrated EMC filter	High electromagnetic compatibility.	Low EMC emissions in selected environments.
Built-in brake chopper as standard	No need for an external brake chopper.	Space savings, reduced installation cost.
FlashDrop tool	Faster and easier drive setup and commissioning for volume manufacturing and maintenance. The FlashDrop tool enables both downloading and uploading drive parameters.	Fast, safe and trouble-free parameter setting without the need to power-up the drive. Patented.
PID control	Varies the drive's performance according to the need of the application.	Enhances production output, stability and accuracy.
Coated boards	Board coating protects the electronics from hazards including static discharge and airborne contaminates, including moisture.	Reduces maintenance due to good protection of electronics components.

Easily integrated drives for a wide range of applications

ABB micro drives bring speed control benefits to a wide variety of applications.

In mixing applications the drive provides high starting torque which benefits the start of the mixing operation. The silent operation mode adjusts the switching frequency of the drive to a higher level after the high-torque start, resulting in lower audible noise. The FlashDrop tool provides a quick and safe way to configure multiple drives for identical mixer applications.

In conveyors the belt speed can be controlled using a drive and a motor. Production lines often have multiple stages, including conveyors, which need to be efficiently linked with each other to provide high production output. A drive provides smooth start and stop of the conveyor, thereby reducing mechanical stress and lowering maintenance costs.

A heat pump system consists of an indoor unit with fan and an outdoor unit with a compressor and a blower. The outdoor unit uses the compressor and the blower to dissipate the heat. The cooled air is blown indoors by fans located in the indoor unit. Drive allows the user to variably control the cooling power based on customer request. AC drives optimizes systems' energy efficiency and smoothens system operation.

Fans are used for process cooling and ventilation in industrial, commercial and domestic environments. Using a drive to control air flow enables energy savings compared to mechanical flow control methods. An ABB drive has integrated PID control which provides optimal air flow by adjusting the fan speed based on a given reference value.

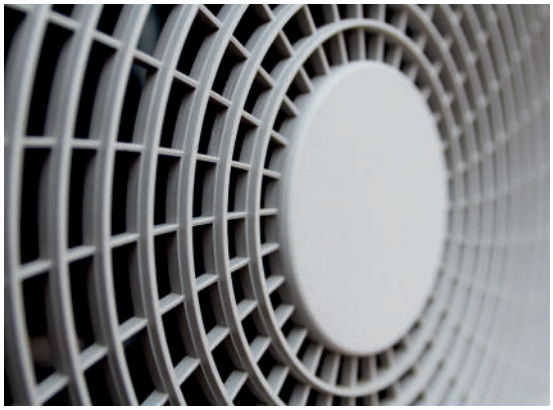

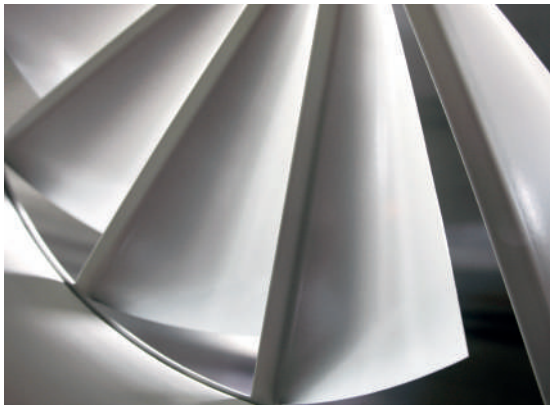

Ratings, types and dimensions

Type designation
In column 4 on the right is the unique reference number that clearly indentifies your drive by power rating and frame size. Once you have selected the type designation, the frame size (column 5) can be used to determine the drives dimensions, shown below.

Voltages
ACS150 is available in two voltage ranges:
2 = 200 to 240 V
4 = 380 to 480 V
Insert either “2” or “4”, depending on your chosen voltage, into the type designation shown on the page 7.

Construction
“01X” and “03X” within the type designation varies depending on the drive phase and EMC filtering. Choose below the one you need.
01 = 1-phase
03 = 3-phase
E = EMC filter connected, 50 Hz frequency
U = EMC filter disconnected, 60 Hz frequency (In case the filter is required it can easily be connected.)

Cabinet-mounted drives (UL open)

	IP20 UL open					
Frame size	H1 mm	H2 mm	H3 mm	W mm	D mm	Weight kg
R0	169	202	239	70	142	1.1
R1	169	202	239	70	142	1.3
R2	169	202	239	105	142	1.5

H1 = Height without fastenings and clamping plate.
H2 = Height with fastenings but without clamping plate.
H3 = Height with fastenings and clamping plate.
W = Width
D = Depth

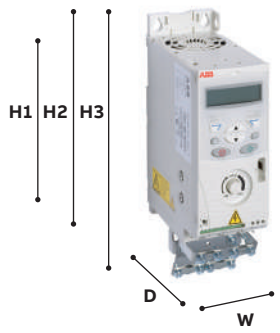

Wall-mounted drives (NEMA 1)

	NEMA 1				
Frame size	H4 mm	H5 mm	W mm	D mm	Weight kg
R0	257	280	70	142	1.5
R1	257	280	70	142	1.7
R2	257	282	105	142	1.9

H4 = Height with fastenings and NEMA 1 connection box.
H5 = Height with fastenings, NEMA 1 connection box and hood.
W = Width
D = Depth

Ratings				
P_N kW	P_N hp	I_{2N} A	Type designation	Frame size
1-phase AC supply, 200 to 240 V				
0.37	0.5	2.4	ACS150-01X-02A4-2	R0
0.75	1	4.7	ACS150-01X-04A7-2	R1
1.1	1.5	6.7	ACS150-01X-06A7-2	R1
1.5	2	7.5	ACS150-01X-07A5-2	R2
2.2	3	9.8	ACS150-01X-09A8-2	R2
3-phase AC supply, 200 to 240 V				
0.37	0.5	2.4	ACS150-03X-02A4-2	R0
0.55	0.75	3.5	ACS150-03X-03A5-2	R0
0.75	1	4.7	ACS150-03X-04A7-2	R1
1.1	1.5	6.7	ACS150-03X-06A7-2	R1
1.5	2	7.5	ACS150-03X-07A5-2	R1
2.2	3	9.8	ACS150-03X-09A8-2	R2
3-phase AC supply, 380 to 480 V				
0.37	0.5	1.2	ACS150-03X-01A2-4	R0
0.55	0.75	1.9	ACS150-03X-01A9-4	R0
0.75	1	2.4	ACS150-03X-02A4-4	R1
1.1	1.5	3.3	ACS150-03X-03A3-4	R1
1.5	2	4.1	ACS150-03X-04A1-4	R1
2.2	3	5.6	ACS150-03X-05A6-4	R1
4	5	8.8	ACS150-03U-08A8-4	R1

X within the type code stands for E or U.

Technical data

Mains connection	
Voltage and power range	1-phase, 200 to 240 V ± 10% 0.37 to 2.2 kW (0.5 to 3 hp) 3-phase, 200 to 240 V ± 10% 0.37 to 2.2 kW (0.5 to 3 hp) 3-phase, 380 to 480 V ± 10% 0.37 to 4 kW (0.5 to 5 hp)
Frequency	48 to 63 Hz
Motor connection	
Voltage	3-phase, from 0 to U_{supply}
Frequency	0 to 500 Hz
Continuous loading capability (constant torque at a max. ambient temperature of 40 °C)	Rated output current I_{2N}
Overload capability (at a max. ambient temperature of 40 °C)	At heavy duty use 1.5 x I_{2N} for 1 minute every 10 minutes At start 1.8 x I_{2N} for 2 s
Switching frequency Default Selectable	 4 kHz 4 to 16 kHz with 4 kHz steps
Acceleration time	0.1 to 1800 s
Deceleration time	0.1 to 1800 s
Braking	Built-in brake chopper as standard
Motor control method	Scalar U/f
Environmental limits	
Ambient temperature	-10 to 40 °C (14 to 104 °F), no frost allowed, 50 °C (122 °F) with 10% derating
Altitude Output current	 Rated current available at 0 to 1000 m (0 to 3281 ft) reduced by 1% per 100 m (328 ft) over 1000 to 2000 m (3281 to 6562 ft)
Relative humidity	Lower than 95% (without condensation)
Degree of protection	IP20/Optional NEMA 1 enclosure
Enclosure colour	NCS 1502-Y, RAL 9002, PMS 420 C
Contamination levels Transportation Storage Operation	IEC 721-3-3 No conductive dust allowed Class 1C2 (chemical gases) Class 1S2 (solid particles) Class 2C2 (chemical gases) Class 2S2 (solid particles) Class 3C2 (chemical gases) Class 3S2 (solid particles)

Chokes	
AC input chokes	External option. For reducing THD in partial loads and to comply with EN 61000-3-2.
AC output chokes	External option. To achieve longer motor cables.
Programmable control connections	
One analog input Voltage signal Current signal Potentiometer reference value Resolution Accuracy	 0 (2) to 10 V, R_{in} > 312 kΩ 0 (4) to 20 mA, R_{in} = 100 Ω 10 V ± 1% max. 10 mA, R < 10 kΩ 0.1% ± 2%
Auxiliary voltage	24 V DC ± 10%, max. 200 mA
Five digital inputs	12 to 24 V DC with internal or external supply, PNP and NPN, pulse train 0 to 16 kHz
Input impedance	2.4 kΩ
One relay output Type Maximum switching voltage Maximum switching current Maximum continuous current	 NO + NC 250 V AC/30 V DC 0.5 A/30 V DC; 5 A/230 V AC 2 A rms
Product compliance	
Low voltage Directive 2006/95/EC with supplements Machinery Directive 2006/42/EC EMC Directive 2004/108/EC with supplements Quality assurance system ISO 9001 Environmental system ISO 14001 UL, cUL, CE, C-Tick and GOST R approvals RoHS compliant	

Control connections and interfaces

Application macros
Application macros are preprogrammed parameter sets. When starting up the drive, the user typically selects one of the macros that is best suited for the application. The diagram below gives an overview of ACS150 control connections and shows the default I/O connections for the ABB standard macro.

ABB micro drives have six standard macros:
- ABB standard macro
- 3-wire macro
- Alternate macro
- Motor potentiometer macro
- Hand/auto macro
- PID control macro

In addition to the standard macros the user can create three user macros. The user macro allows the user to save the parameter settings for later use.

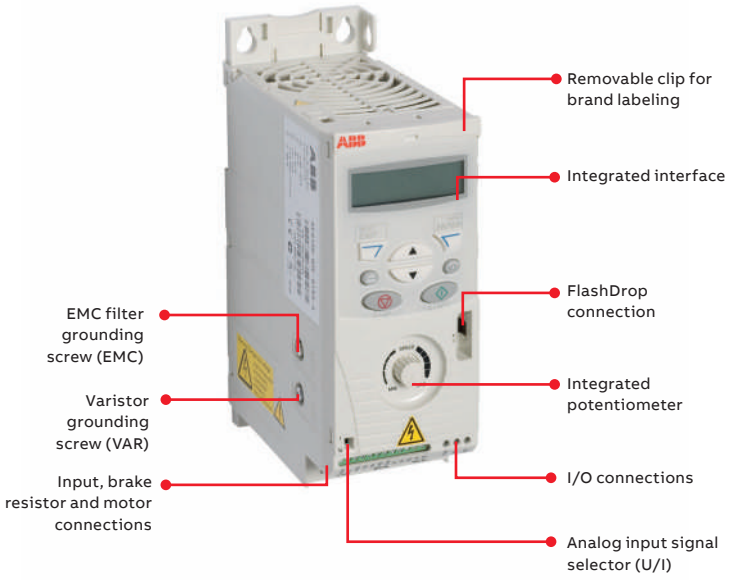

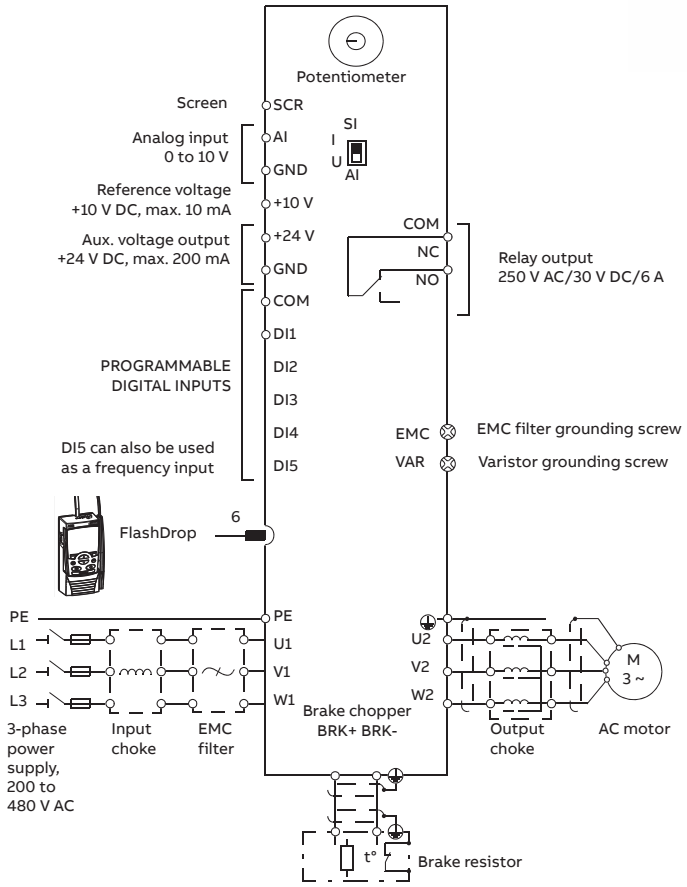

Typical I/O connections

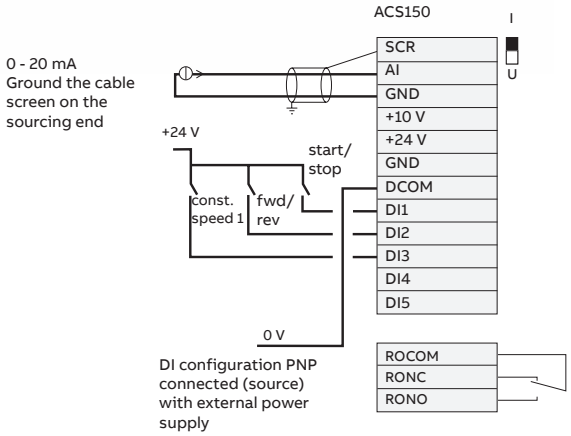

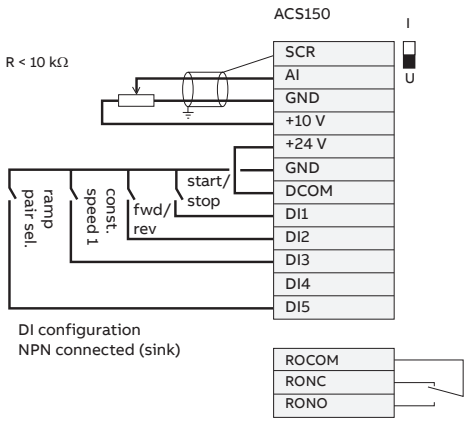

Cooling and fuses

Cooling
ACS150 is fitted with cooling fans as standard. The cooling air must be free from corrosive substances and must not be above the maximum ambient temperature of 40 °C (50 °C with derating). For more specific limits see the Technical data - Environmental limits in this catalog.

Fuses
Standard fuses can be used with ABB micro drives. For input fuse connections see table below.

Cooling air flow

Type designation	Frame size	Heat dissipation [W]	Heat dissipation BTU/hr	Air flow m^3/h	Air flow ft^3/min
1-phase, 200 to 240 V					
ACS150-01X-02A4-2	R0	25	85	-*)	-*)
ACS150-01X-04A7-2	R1	46	157	24	14
ACS150-01X-06A7-2	R1	71	242	24	14
ACS150-01X-07A5-2	R2	73	249	21	12
ACS150-01X-09A8-2	R2	96	328	21	12
3-phase, 200 to 240 V					
ACS150-03X-02A4-2	R0	19	65	-*)	-*)
ACS150-03X-03A5-2	R0	31	106	-*)	-*)
ACS150-03X-04A7-2	R1	38	130	24	14
ACS150-03X-06A7-2	R1	60	205	24	14
ACS150-03X-07A5-2	R1	62	212	21	12
ACS150-03X-09A8-2	R2	83	283	21	12
3-phase, 380 to 480 V					
ACS150-03X-01A2-4	R0	11	38	-*)	-*)
ACS150-03X-01A9-4	R0	16	55	-*)	-*)
ACS150-03X-02A4-4	R1	21	72	13	8
ACS150-03X-03A3-4	R1	31	106	13	8
ACS150-03X-04A1-4	R1	40	137	13	8
ACS150-03X-05A6-4	R1	61	208	19	11
ACS150-03X-07A3-4	R1	74	253	24	14
ACS150-03X-08A8-4	R1	94	321	24	14

X within the type code stands for E or U.
*) Frame size R0 with free convection cooling.

Selection table

Type designation	Frame size	IEC fuses [A]	IEC fuses Fuse type*)	UL fuses [A]	UL fuses Fuse type*)
1-phase, 200 to 240 V					
ACS150-01X-02A4-2	R0	10	gG	10	UL class T
ACS150-01X-04A7-2	R1	16	gG	20	UL class T
ACS150-01X-06A7-2	R1	20	gG	25	UL class T
ACS150-01X-07A5-2	R2	25	gG	30	UL class T
ACS150-01X-09A8-2	R2	35	gG	35	UL class T
3-phase, 200 to 240 V					
ACS150-03X-02A4-2	R0	10	gG	10	UL class T
ACS150-03X-03A5-2	R0	10	gG	10	UL class T
ACS150-03X-04A7-2	R1	10	gG	15	UL class T
ACS150-03X-06A7-2	R1	16	gG	15	UL class T
ACS150-03X-07A5-2	R1	16	gG	15	UL class T
ACS150-03X-09A8-2	R2	16	gG	20	UL class T
3-phase, 380 to 480 V					
ACS150-03X-01A2-4	R0	10	gG	10	UL class T
ACS150-03X-01A9-4	R0	10	gG	10	UL class T
ACS150-03X-02A4-4	R1	10	gG	10	UL class T
ACS150-03X-03A3-4	R1	10	gG	10	UL class T
ACS150-03X-04A1-4	R1	16	gG	15	UL class T
ACS150-03X-05A6-4	R1	16	gG	15	UL class T
ACS150-03X-07A3-4	R1	16	gG	20	UL class T
ACS150-03X-08A8-4	R1	20	gG	25	UL class T

X within the type code stands for E or U.
*) According to IEC-60269 standard.

Free space requirements

Enclosure type	Space above mm	Space below mm	Space on left/right mm
All frame sizes	75	75	0

Options

FlashDrop tool
FlashDrop is a powerful palm sized tool for fast and easy parameter selecting and setting. It gives the possibility to hide selected parameters to protect the machine. Only the parameters needed in the application are shown. The tool can copy parameters between two drives or between a PC and a drive. All the above can be done without a power connection to the drive – in fact, it is not even necessary to unpack the drive.

DrivePM
DrivePM (Drive parameter manager) is a tool to create, edit and copy parameter sets for FlashDrop. For each parameter/group the user has a possibility to hide it, which means that the drive user does not see the parameter/group at all.

DrivePM requirements
- Windows 2000/XP/Vista/Windows 7
- Free serial port from a PC

FlashDrop package includes
- FlashDrop tool
- DrivePM software on a CD-rom
- User's manual in pdf-format on the previous CD-rom
- Cable for connection between the PC and FlashDrop
- Battery charger

Protection class NEMA 1
The NEMA 1 kit includes a connection box for finger protection, conduit tube installation, and a hood for protection against dirt and dust.

Brake resistors
ACS150 is delivered with an integrated brake chopper as standard. The brake resistor is selected using the table below. For more information about the selection of brake resistors, see the ACS150 user's manual.

Brake chopper limits and resistor selection table

Type designation	R_{min}		P_{BRmax}	Selection table by resistor type			
				CBR-V			
ACS150-	[ohm]	[kW]	[hp]	160	210	460	Braking time [1] [s]
1-phas, 200 to 240 V							
01X-02A4-2	70	0.37	0.5	●			90
01X-04A7-2	40	0.75	1	●			45
01X-06A7-2	40	1.1	1.5	●			28
01X-07A5-2	30	1.5	2	●			19
01X-09A8-2	30	2.2	3	●			14
3-phase, 200 to 240 V							
03X-02A4-2	70	0.37	0.5	●			90
03X-03A5-2	70	0.55	0.75	●			60
03X-04A7-2	40	0.75	1	●			42
03X-06A7-2	40	1.1	1.5	●			29
03X-07A5-2	30	1.5	2	●			19
03X-09A8-2	30	2.2	3	●			14
3-phase, 380 to 480 V							
03X-01A2-4	200	0.37	0.5		●		90
03X-01A9-4	175	0.55	0.75		●		90
03X-02A4-4	165	0.75	1		●		60
03X-03A3-4	150	1.1	1.5		●		37
03X-04A1-4	130	1.5	2		●		27
03X-05A6-4	100	2.2	3		●		17
03X-07A3-4	70	3	4			●	29
03X-08A8-4	70	4	5			●	20

X within the type code stands for E or U.
[1] Braking time = Maximum allowed braking time in seconds at PBRmax every 120 seconds, at 40 °C ambient temperature

Ratings by resistor type	CBR-V 160	CBR-V 210	CBR-V 460
Nominal power [W]	280	360	790
Resistance [ohm]	70	200	80

Options
External

A separate order line and type designation is required for any of these external options.

Input chokes
Input choke smooths the wave shape of the mains current and reduces total harmonic distortion (THD). Together with the input choke, the ACS150 is designed to fulfill the requirements of the harmonics standard EN/IEC 61000-3-12. In addition, the input choke provides improved protection against mains voltage transients.

Output chokes
Output choke decreases du/dt on the output and filters current spikes caused by voltage spikes. With an output choke it is possible to increase the motor cable length which could be otherwise limited due to a temperature increase resulting from current spikes and electromagnetic performance.

Input chokes

Type designation ACS150-	Frame size	Input choke	I_{1N} without choke [A]	I_{1N} with choke [A]	I_{TH} [A]	L [mH]
1-phase, 200 to 240 V						
01X-02A4-2	R0	CHK-A1	6.1	4.5	5	8.0
01X-04A7-2	R1	CHK-B1	11.4	8.1	10	2.8
01X-06A7-2	R1	CHK-C1	16.1	11	16	1.2
01X-07A5-2	R2	CHK-C1	16.8	12	16	1.2
01X-09A8-2	R2	CHK-D1	21	15	25	1.0
3-phase, 200 to 240						
03X-02A4-2	R0	CHK-01	4.3	2.2	4.2	6.4
03X-03A5-2	R0	CHK-02	6.1	3.6	7.6	4.6
03X-04A7-2	R1	CHK-03	7.6	4.8	13	2.7
03X-06A7-2	R1	CHK-03	11.8	7.2	13	2.7
03X-07A5-2	R1	CHK-04	12	8.2	22	1.5
03X-09A8-2	R2	CHK-04	14.3	11	22	1.5
3-phase, 380 to 480 V						
03X-01A2-4	R0	CHK-01	2.2	1.1	4.2	6.4
03X-01A9-4	R0	CHK-01	3.6	1.8	4.2	6.4
03X-02A4-4	R1	CHK-01	4.1	2.3	4.2	6.4
03X-03A3-4	R1	CHK-01	6	3.1	4.2	6.4
03X-04A1-4	R1	CHK-02	6.9	3.5	7.6	4.6
03X-05A6-4	R1	CHK-02	9.6	4.8	7.6	4.6
03X-07A3-4	R1	CHK-02	11.6	6.1	7.6	4.6
03X-08A8-4	R1	CHK-03	13.6	7.7	13	2.7

I_{1N} = Nominal input current
I_{TH} = Nominal choke thermal current
L = Choke inductance

Output chokes

Type designation ACS150-	Frame size	Output choke	Cable length [m]
1-phase, 200 to 240 V			
01X-02A4-2	R0	ACS-CHK-B3	60
01X-04A7-2	R1	ACS-CHK-B3	100
01X-06A7-2	R1	ACS-CHK-C3	100
01X-07A5-2	R2	ACS-CHK-C3	100
01X-09A8-2	R2	ACS-CHK-C3	100
3-phase, 200 to 240 V			
03X-02A4-2	R0	ACS-CHK-B3	60
03X-03A5-2	R0	ACS-CHK-B3	60
03X-04A7-2	R1	ACS-CHK-B3	100
03X-06A7-2	R1	ACS-CHK-C3	100
03X-07A5-2	R1	ACS-CHK-C3	100
03X-09A8-2	R2	ACS-CHK-C3	100
3-phase, 380 to 480 V			
03X-01A2-4	R0	ACS-CHK-B3	60
03X-01A9-4	R0	ACS-CHK-B3	60
03X-02A4-4	R1	ACS-CHK-B3	100
03X-03A3-4	R1	ACS-CHK-B3	100
03X-04A1-4	R1	ACS-CHK-C3	100
03X-05A6-4	R1	ACS-CHK-C3	100
03X-07A3-4	R1	NOCH-0016-6x	100
03X-08A8-4	R1	NOCH-0016-6x	100

Options
External

A separate order line and type designation is required for any of these external options.

EMC filters
The ACS150's internal EMC filter is designed to meet category C3 requirements of EN/IEC 61800-3 standard. External EMC filters are used to enhance the drives electromagnetic performance in conjunction with its internal filtering. Maximum motor cable length depends on required electro-magnetic performance, according to the table below.

Low leakage current filters
Low leakage current filters are ideal for installations where residual current devices (RCD) are required and leakage current needs to be below 30 mA.

EMC filters

Type designation			Cable length[1] with external EMC filter			Cable length[1] without external EMC filter	
ACS150-	Frame size	Filter type	C1 [m]	C2 [m]	C3 [m]	C3 [m]	C4 [m]
1-phase, 200 to 240 V							
01X-02A4-2	R0	RFI-11	10	30	-	30	30
01X-04A7-2	R1	RFI-12	10	30	50	30	50
01X-06A7-2	R1	RFI-12	10	30	50	30	50
01X-07A5-2	R2	RFI-13	10	30	50	30	50
01X-09A8-2	R2	RFI-13	10	30	50	30	50
3-phase, 200 to 240 V							
03X-02A4-2	R0	RFI-32	10	30	-	30	30
03X-03A5-2	R0	RFI-32	10	30	-	30	30
03X-04A7-2	R1	RFI-32	10	30	50	30	50
03X-06A7-2	R1	RFI-32	10	30	50	30	50
03X-07A5-2	R1	RFI-32	10	30	50	30	50
03X-09A8-2	R2	RFI-32	10	30	50	30	50
3-phase, 380 to 480 V							
03X-01A2-4	R0	RFI-32	30	30	-	30	30
03X-01A9-4	R0	RFI-32	30	30	-	30	30
03X-02A4-4	R1	RFI-32	50	50	50	30	50
03X-03A3-4	R1	RFI-32	50	50	50	30	50
03X-04A1-4	R1	RFI-32	50	50	50	30	50
03X-05A6-4	R1	RFI-32	50	50	50	30	50
03X-07A3-4	R1	RFI-32	50	50	50	30	50
03X-08A8-4	R1	RFI-32	50	50	50	30	50

[1] Internal EMC filter must be connected with the EMC screw in the drive. When the filter is not connected the C4 maximum cable lengths are allowed to be used.

Low leakage current filters

Type designation			Cable length[1] with LRFI filter
ACS150-	Frame size	Filter type	C2 [m]
Low leakage current filters, 3-phase, 400 V			
03X-01A2-4	R0	LRFI-31	10
03X-01A9-4	R0	LRFI-31	10
03X-02A4-4	R1	LRFI-31	10
03X-03A3-4	R1	LRFI-31	10
03X-04A1-4	R1	LRFI-31	10
03X-05A6-4	R1	LRFI-31	10
03X-07A3-4	R1	LRFI-32	10
03X-08A8-4	R1	LRFI-32	10

[1] Internal EMC filter must be disconnected by removing the EMC screw from the drive.

EMC standards in general

EN 61800-3 (2004), product standard	EN 55011, product family standard for industrial, scientific and medical (ISM) equipment	EN 61800-3/A11 (2000), product standard
Category C1	Group 1 Class B	1st environment, unrestricted distribution
Category C2	Group 1 Class A	1st environment, restricted distribution
Category C3	Group 2 Class A	2nd environment, unrestricted distribution
Category C4	Not applicable	2nd environment, restricted distribution

A lifetime of peak performance

You're in control of every life cycle phase of your drives. At the heart of drive services is a four-phase product life cycle management model. This model defines the services recommended and available throughout drives lifespan.

Now it's easy for you to see the exact service and maintenance available for your drives.

ABB drives life cycle phases explained:

	Active	Classic	Limited	Obsolete
	Full range of life cycle services and support		Limited range of life cycle services and support	Replacement and end-of-life services
Product	Product is in active sales and manufacturing phase.	Serial production has ceased. Product may be available for plant extensions, as a spare part or for installed base renewal.	Product is no longer available.	Product is no longer available.
Services	Full range of life cycle services is available.	Full range of life cycle services is available. Product enhancements may be available through upgrade and retrofit solutions.	Limited range of life cycle services is available. Spare parts availability is limited to available stock.	Replacement and end-of-life services are available.

Keeping you informed
We notify you every step of the way using life cycle status statements and announcements.

Your benefit is clear information about your drives' status and precise services available. It helps you plan the preferred service actions ahead of time and make sure that continuous support is always available.

Step 1
Life Cycle Status Announcement
Provides early information about the upcoming life cycle phase change and how it affects the availability of services.

Step 2
Life Cycle Status Statement
Provides information about the drive's current life cycle status, availability of product and services, life cycle plan and recommended actions.

Authorised Value Provider

INFINITE ENGINEERING
one stop safety solutions

—
For more information, please contact
your local ABB representative or visit

abb.com/drives
abb.com/drivespartners

3AFE68596114 REV H EN 13.4.2018

© Copyright 2018 ABB. All rights reserved.
Specifications subject to change without notice.